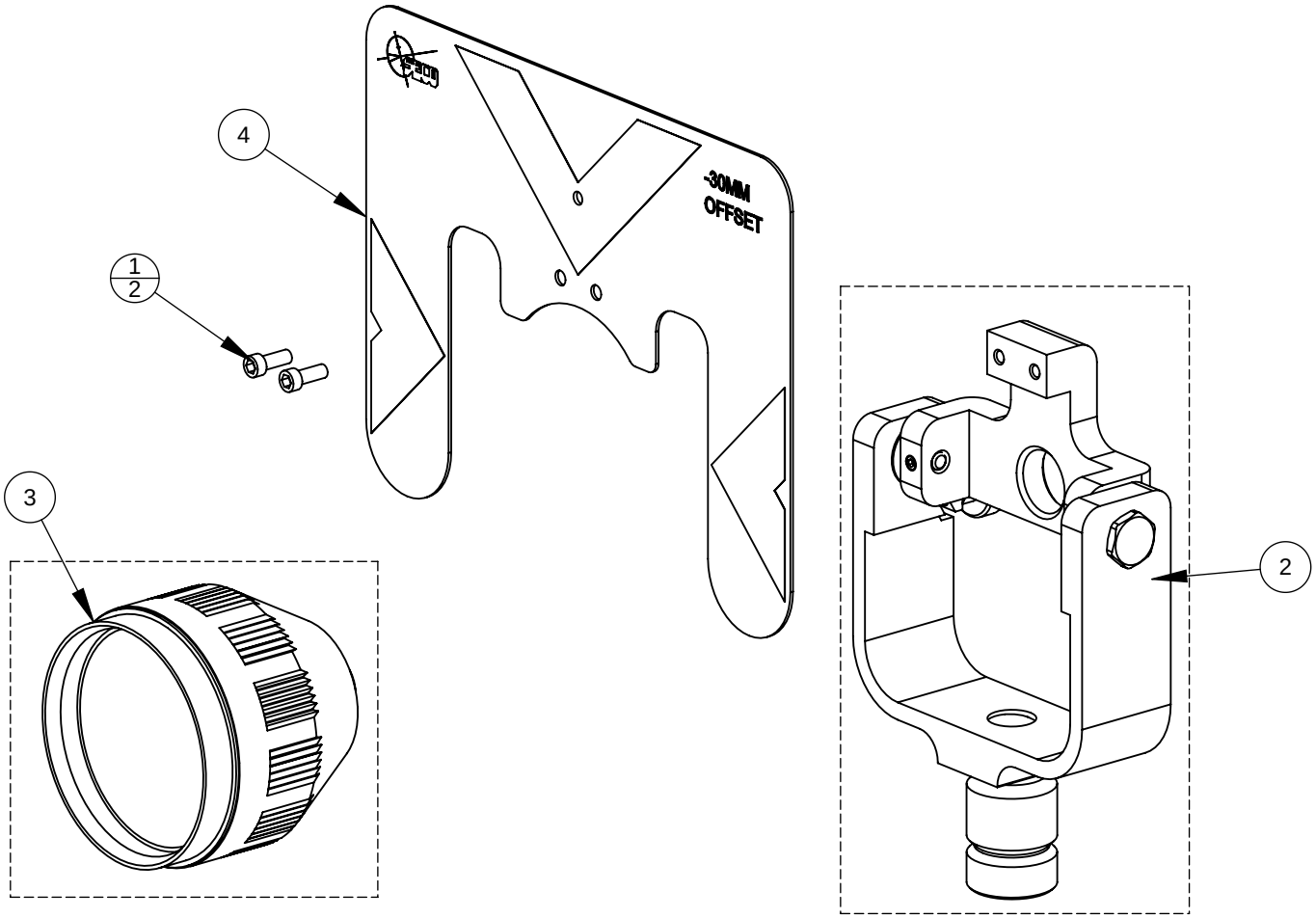

***NOTE**
Components may be sold separately.
Please see sub-assembly part number drawing for details.

ITEM NO.	PartNo	DESCRIPTION	QTY
1	4X10MMSHSS	SCREW,SOCKET CAP,M4 X 10 LONG SS	2
2	6403-01-050	YOKE ASSY,PREMIER	1
3	6411-02-BLK	PRISM,62MM,W/CANISTER,COPPER	1
4	D10563-XXX	PLATE,TARGET,PREMIER,FOR PAINT,SM	1

6422-02-XXX	**PRISM ASSY,SM,FLEX CAN, PREMIER**	**DATE:** 1/24/2008 **REV.** A PAGE 1 OF 1	MANUFACTURING CO., INC. 4155 OASIS ROAD, REDDING, CA 96003